Café™ 36" Commercial Hood

CVW93613MDS / CVW93614MWM

CAFÉ

DISTINCT BY DESIGN™

ALSO AVAILABLE IN

CVW93613MDS
Matte Black

FEATURES

Control Location	Hidden
Cooktop Lighting	Halogen
Ducting	Vertical Only
Exhaust Options	7" Round Duct
Fan Speed Control	4-Speed
Filter Cleaning	Dishwasher Safe
Removable Grease Filter(s)	Yes
CFM/ Sones Rating	590/ 7.5 (High Speed) 160/ 0.4 (Working Speed)
Light Controls	Off/High/Night

TECHNICAL DETAILS

Amp Rating at 120V	3.9

WEIGHTS & DIMENSIONS

Approximate Shipping Weight	77 lb
Net Weight	60 lb
Cabinet Width	36 in
Overall Depth	21 in
Overall Height	18 in
Overall Width	36 in

FEATURES & BENEFITS

Make sure everyone is focused only on your food with **a 590-CFM venting system** that removes smoke, grease, odors and moisture from the air.

Adjust your vents to match your cooking techniques with **four-speed fan control** that removes grease, odors and moisture.

Enjoy a fresh-smelling kitchen all the time with a **vertical exhaust** that takes smoke, grease, odors and moisture away from the cooktop.

Clearly watch the progress of preparing your favorite meals with **dual halogen cooktop lighting** that brightly illuminates the cooking surface.

See your way through midnight snacking with a **night light** that softly illuminates the cooktop and surrounding areas.

Keep your clean-up to a minimum with a **removable grease filter** that helps eliminate hand scrubbing.

Café™ 36" Commercial Hood

CVW93613MDS / CVW93614MWM

CAFÉ

DISTINCT BY DESIGN™

WARRANTY

Parts warranty	Limited 1-year entire appliance
Labor warranty	Limited 1-year entire appliance
Warranty notes	See written warranty for full details

DIMENSIONS AND INSTALLATION INFORMATION

Installation Information:
Before installing, consult Use & Care/installation instructions packed with product for current dimensional data.

Optional Kits for 30" Commercial hoods
UXCH3NDS—Matte Black chimney kit
UXCH4NWM—Matte White chimney kit

AMP RATING

120V	3.9

Installed above a cooktop (shown with optional chimney kit)

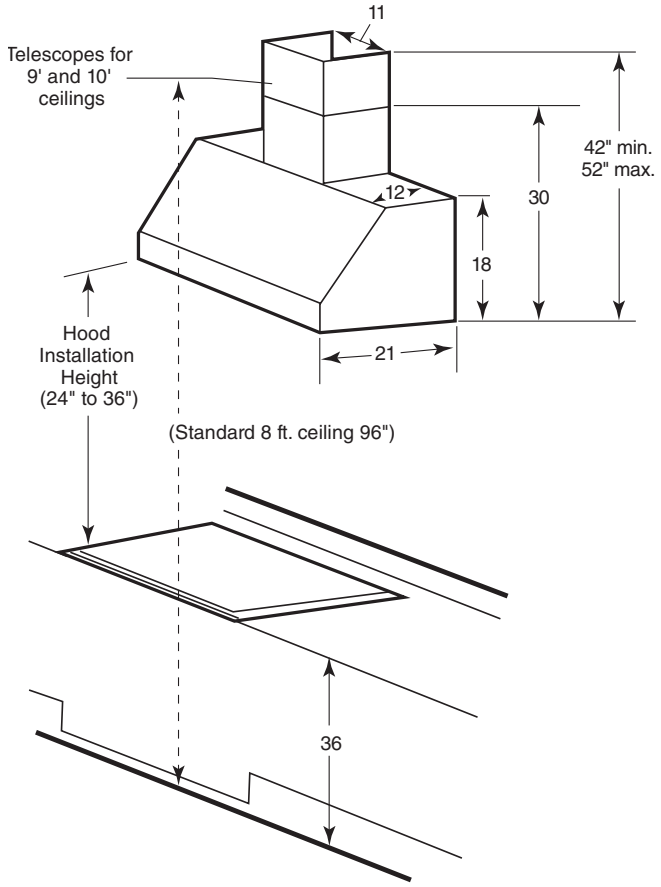

Installed above a range (shown with optional chimney kit)

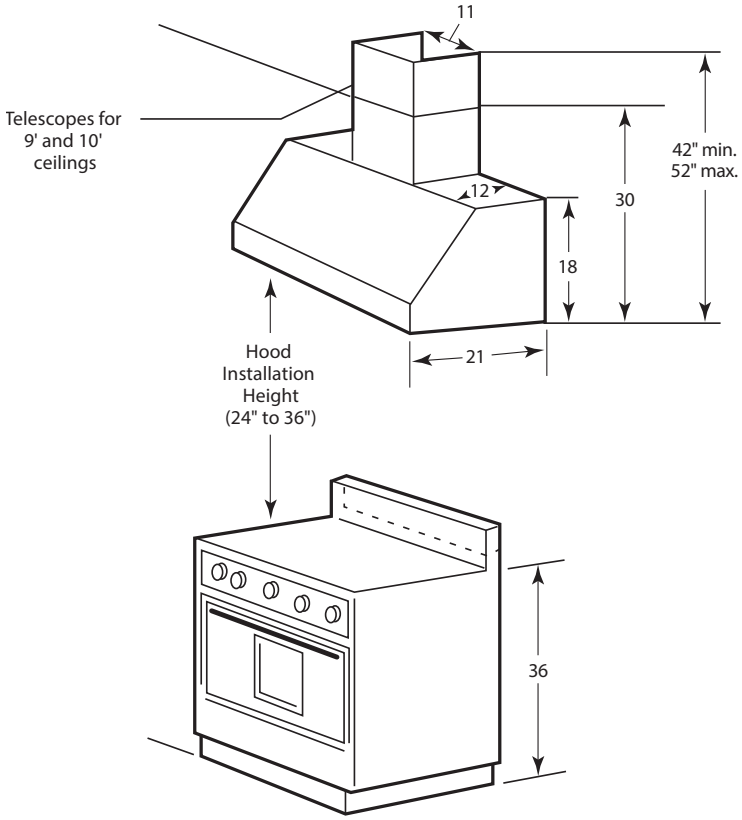

© 2018 GE Appliances PC90238 05/18